63.116 iPad (A16) and iPad (10th generation), 1 of 7

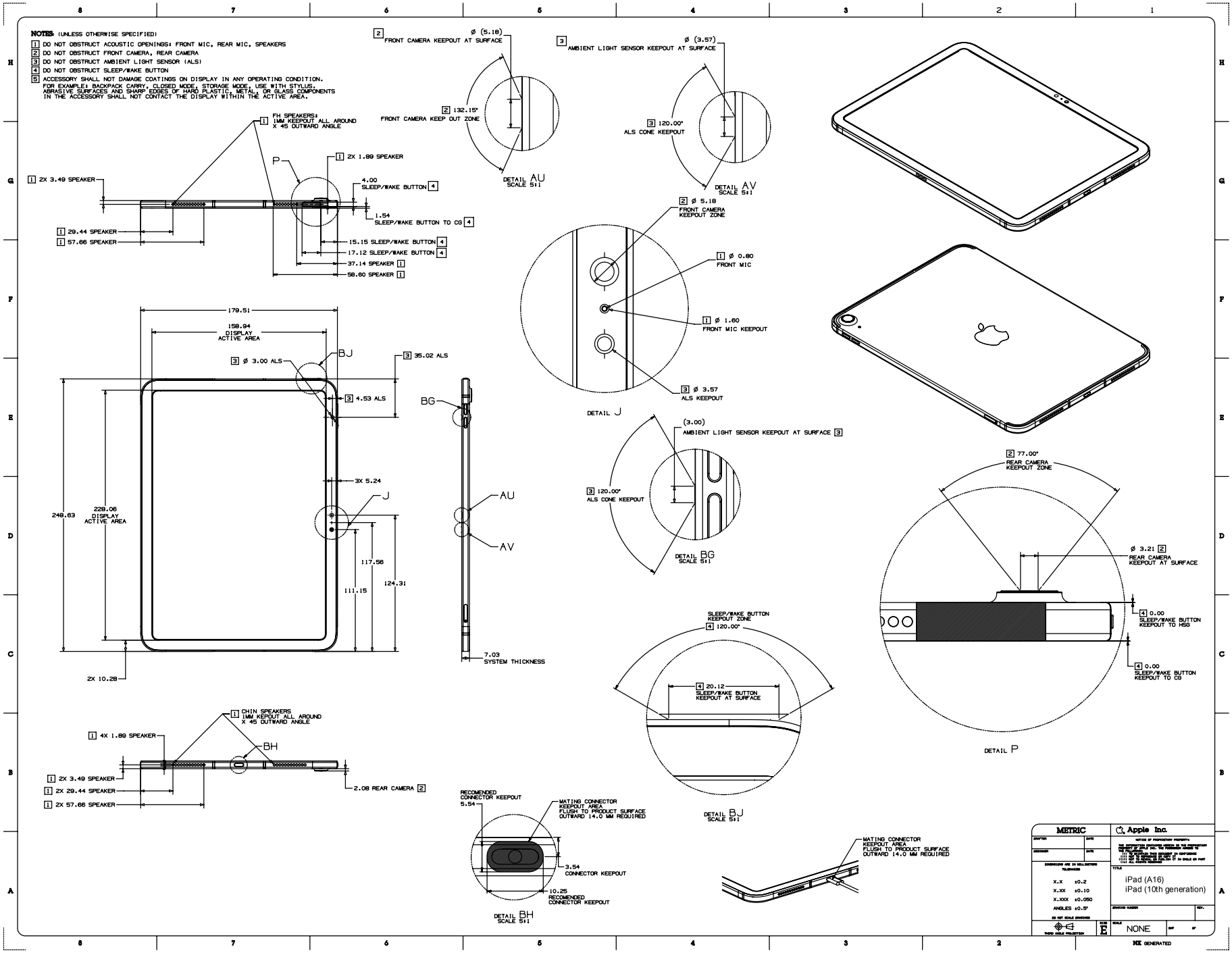

63.117 iPad (A16) and iPad (10th generation), 2 of 7

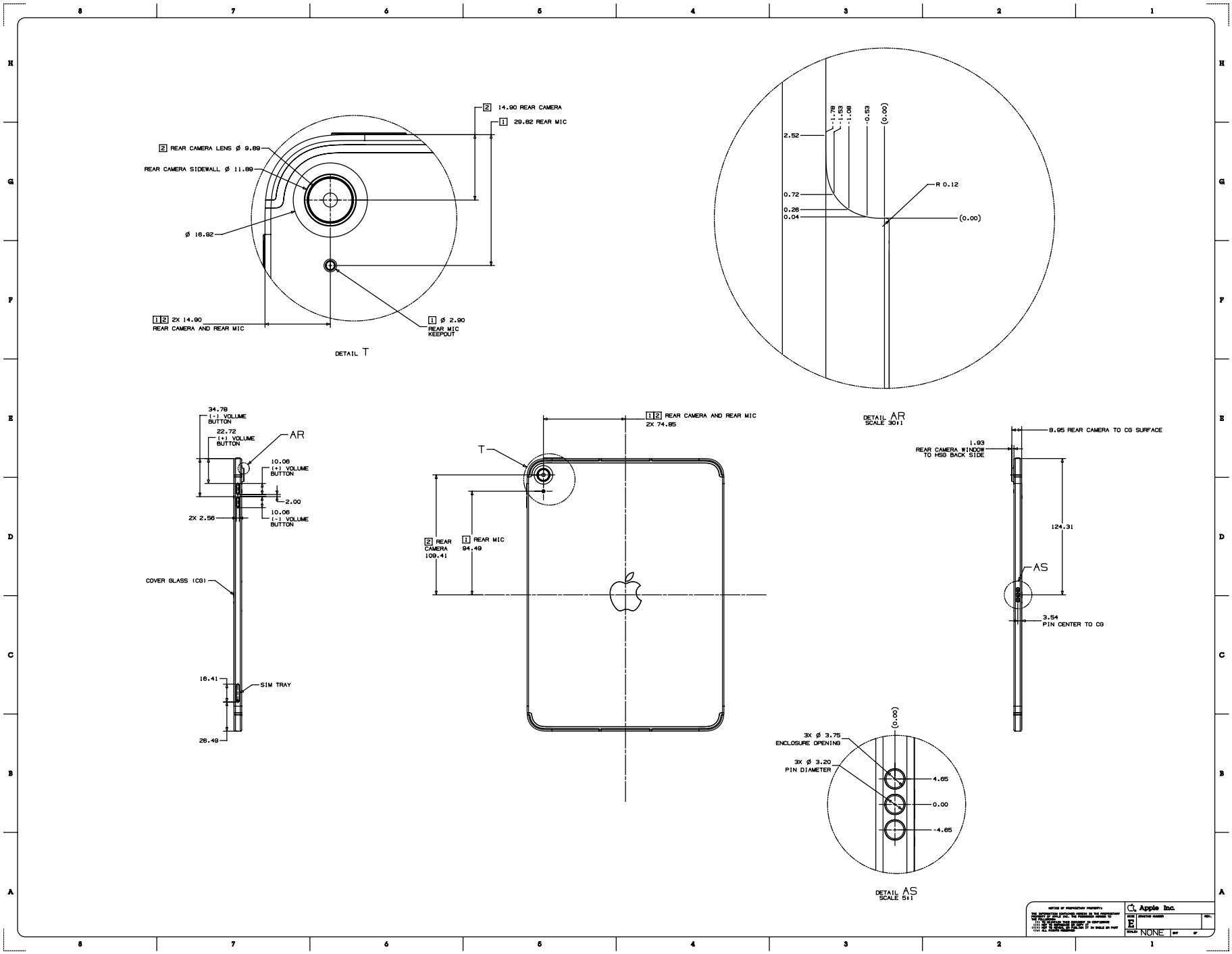

63.118 iPad (A16) and iPad (10th generation), 3 of 7

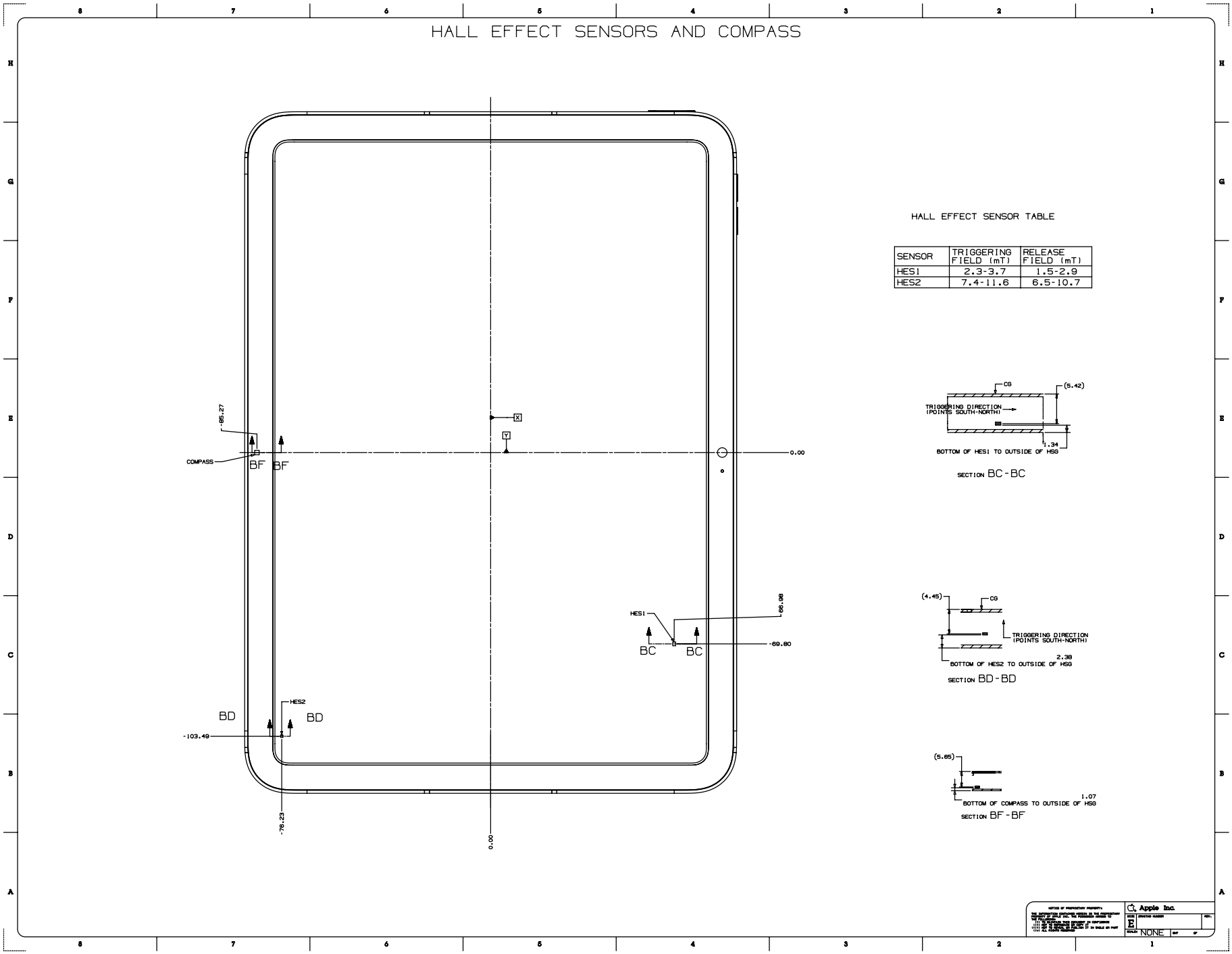

63.119 iPad (A16) and iPad (10th generation), 4 of 7

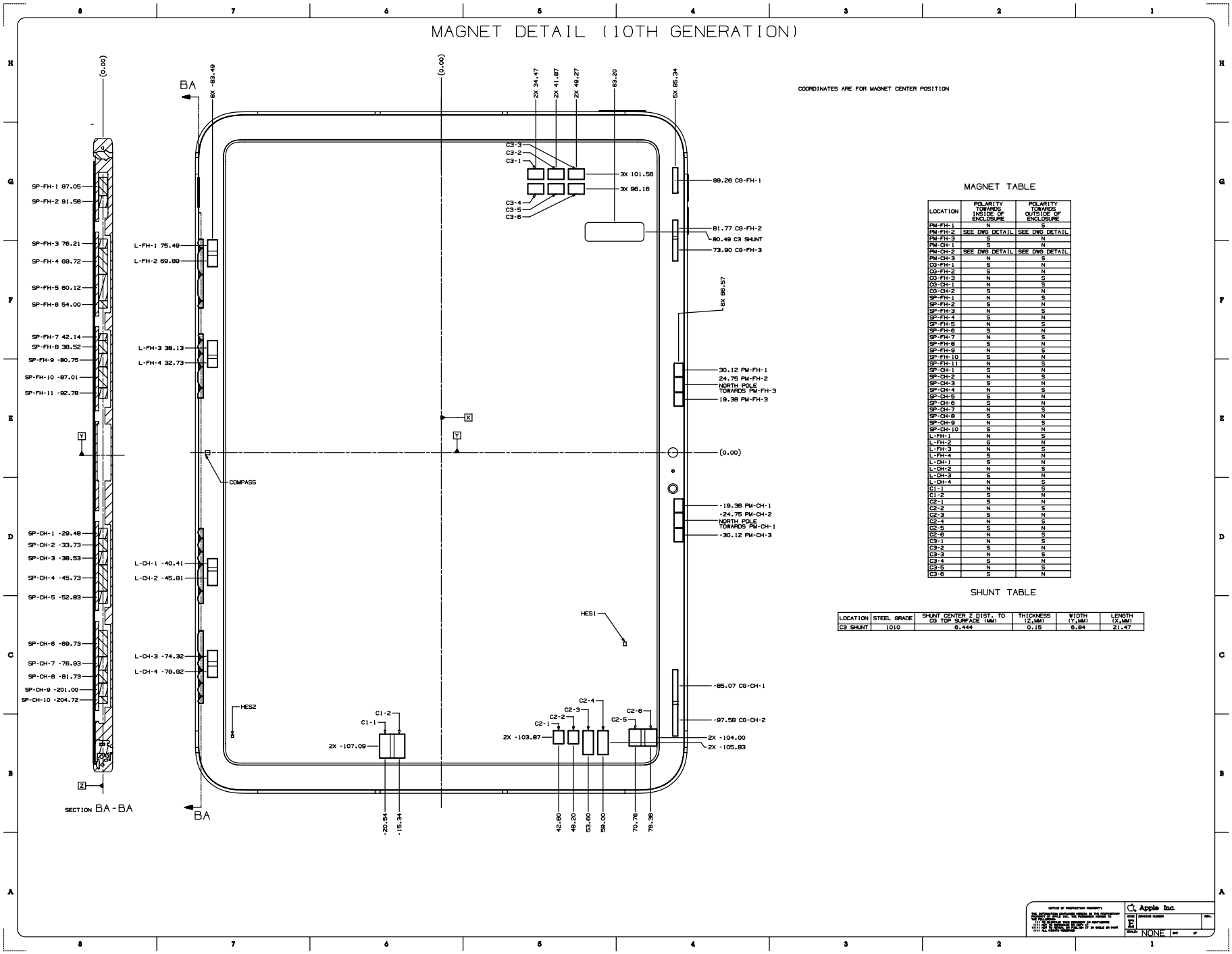

MAGNET TABLE

LOCATION	POLARITY TOWARDS INSIDE OF ENCLOSURE	POLARITY TOWARDS OUTSIDE OF ENCLOSURE
PM-FH-1	N	S
PM-FH-2	SEE DWG DETAIL	SEE DWG DETAIL
PM-FH-3	S	N
PM-CH-1	S	N
PM-CH-2	SEE DWG DETAIL	SEE DWG DETAIL
PM-CH-3	N	S
CG-FH-1	S	N
CG-FH-2	S	N
CG-FH-3	N	S
CG-CH-1	N	S
CG-CH-2	S	N
SP-FH-1	N	S
SP-FH-2	S	N
SP-FH-3	N	S
SP-FH-4	S	N
SP-FH-5	N	S
SP-FH-6	S	N
SP-FH-7	N	S
SP-FH-8	S	N
SP-FH-9	N	S
SP-FH-10	S	N
SP-FH-11	N	S
SP-CH-1	S	N
SP-CH-2	N	S
SP-CH-3	S	N
SP-CH-4	N	S
SP-CH-5	S	N
SP-CH-6	S	N
SP-CH-7	N	S
SP-CH-8	S	N
SP-CH-9	N	S
SP-CH-10	S	N
L-FH-1	N	S
L-FH-2	S	N
L-FH-3	N	S
L-FH-4	S	N
L-CH-1	S	N
L-CH-2	N	S
L-CH-3	S	N
L-CH-4	N	S
C1-1	N	S
C1-2	S	N
C2-1	S	N
C2-2	N	S
C2-3	S	N
C2-4	N	S
C2-5	S	N
C2-6	N	S
C3-1	N	S
C3-2	S	N
C3-3	N	S
C3-4	S	N
C3-5	N	S
C3-6	S	N

SHUNT TABLE

LOCATION	STEEL GRADE	SHUNT CENTER Z DIST. TO CG TOP SURFACE (MM)	THICKNESS (Z,MM)	WIDTH (Y,MM)	LENGTH (X,MM)
C3 SHUNT	1010	6.444	0.15	6.84	21.47

63.120 iPad (A16) and iPad (10th generation), 5 of 7

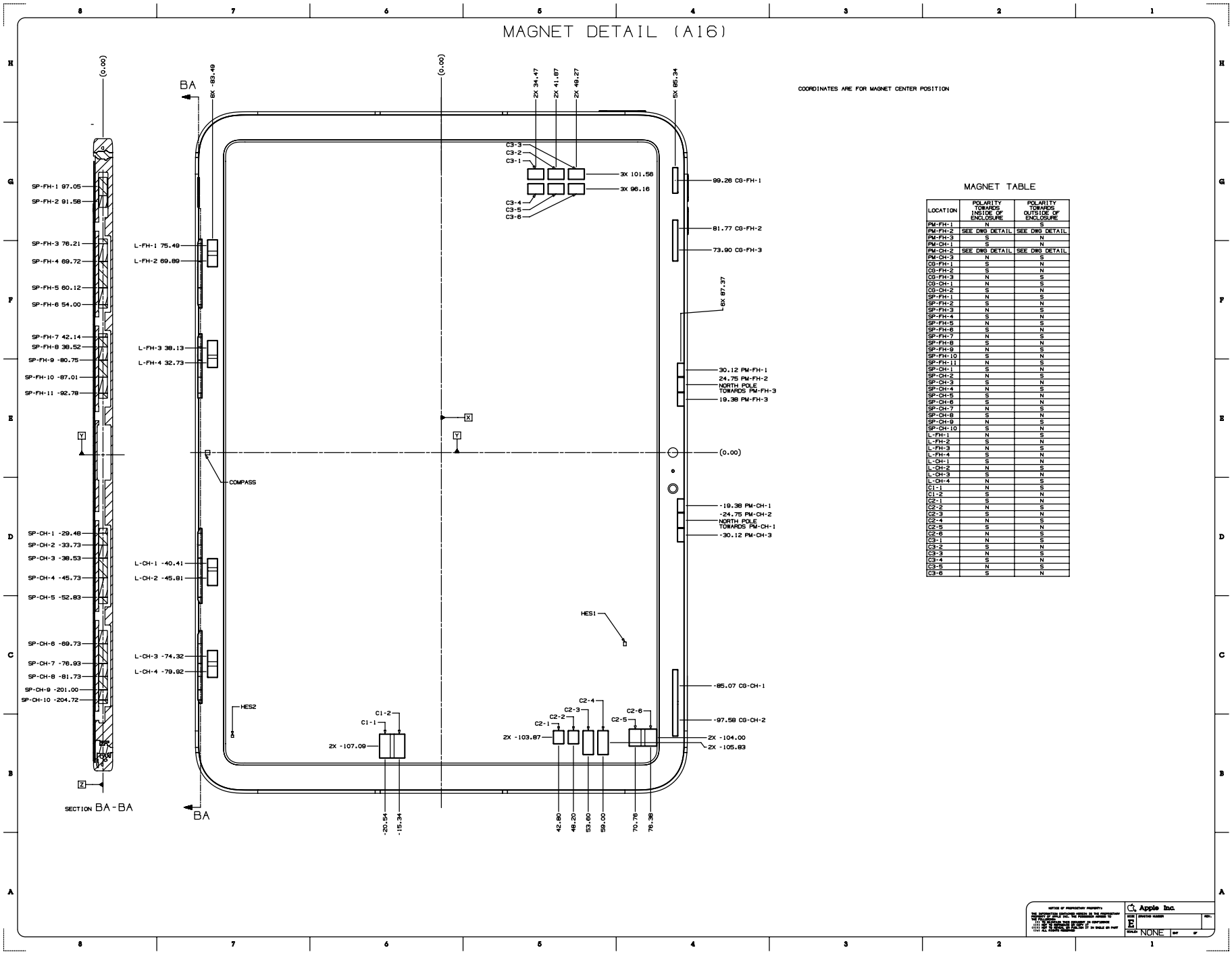

MAGNET TABLE

LOCATION	POLARITY TOWARDS INSIDE OF ENCLOSURE	POLARITY TOWARDS OUTSIDE OF ENCLOSURE
PM-FH-1	N	S
PM-FH-2	SEE DWG DETAIL	SEE DWG DETAIL
PM-FH-3	S	N
PM-CH-1	S	N
PM-CH-2	SEE DWG DETAIL	SEE DWG DETAIL
PM-CH-3	N	S
CG-FH-1	S	N
CG-FH-2	S	N
CG-FH-3	N	S
CG-CH-1	N	S
CG-CH-2	S	N
SP-FH-1	N	S
SP-FH-2	S	N
SP-FH-3	N	S
SP-FH-4	S	N
SP-FH-5	N	S
SP-FH-6	S	N
SP-FH-7	N	S
SP-FH-8	S	N
SP-FH-9	N	S
SP-FH-10	S	N
SP-FH-11	N	S
SP-CH-1	S	N
SP-CH-2	N	S
SP-CH-3	S	N
SP-CH-4	N	S
SP-CH-5	S	N
SP-CH-6	S	N
SP-CH-7	N	S
SP-CH-8	S	N
SP-CH-9	N	S
SP-CH-10	S	N
L-FH-1	N	S
L-FH-2	S	N
L-FH-3	N	S
L-FH-4	S	N
L-CH-1	S	N
L-CH-2	N	S
L-CH-3	S	N
L-CH-4	N	S
C1-1	N	S
C1-2	S	N
C2-1	S	N
C2-2	N	S
C2-3	S	N
C2-4	N	S
C2-5	S	N
C2-6	N	S
C3-1	N	S
C3-2	S	N
C3-3	N	S
C3-4	S	N
C3-5	N	S
C3-6	S	N

Copyright © 2026 Apple Inc. All Rights Reserved.

63.121 iPad (A16) and iPad (10th generation), 6 of 7

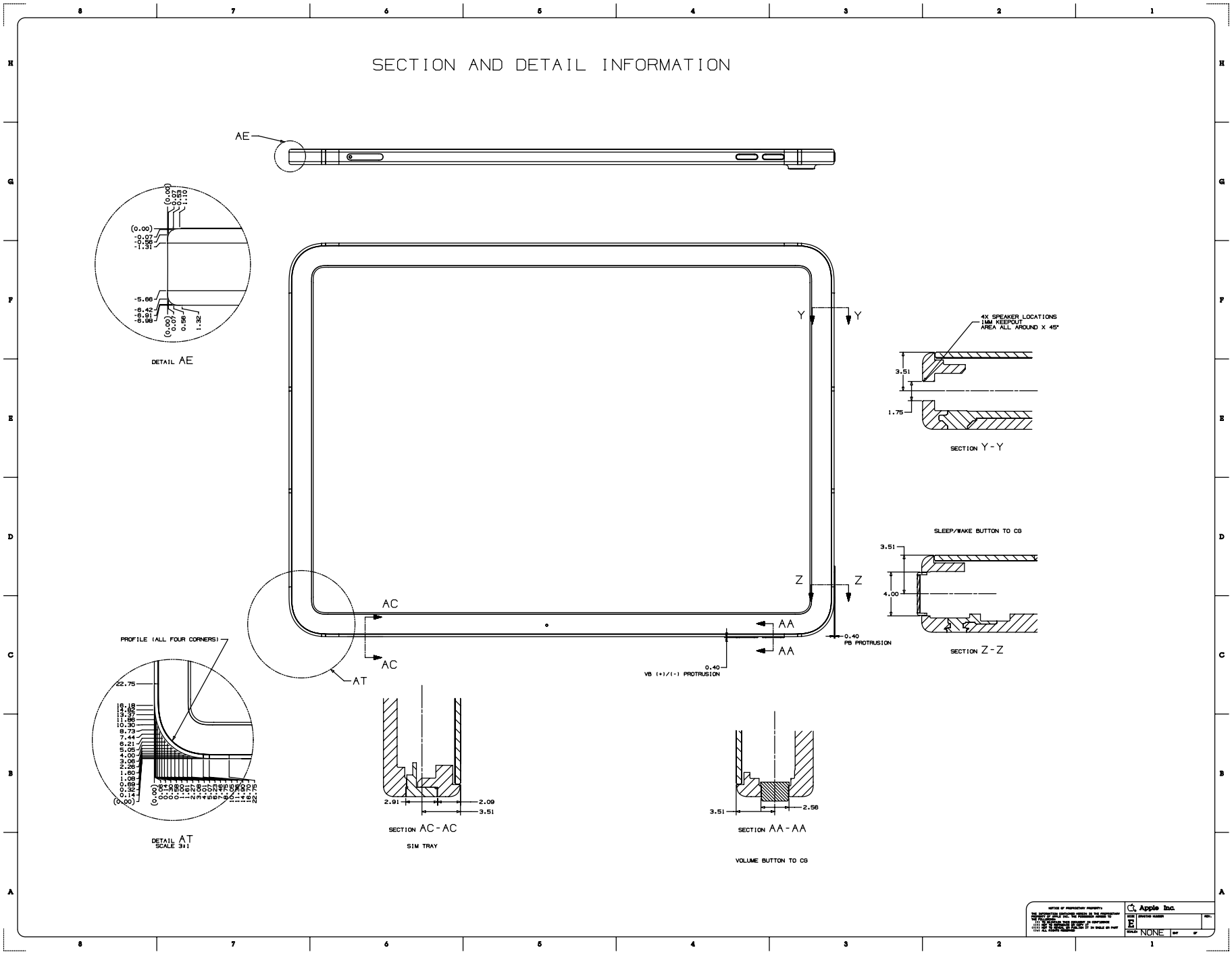

Copyright © 2026 Apple Inc. All Rights Reserved.

63.122 iPad (A16) and iPad (10th generation), 7 of 7

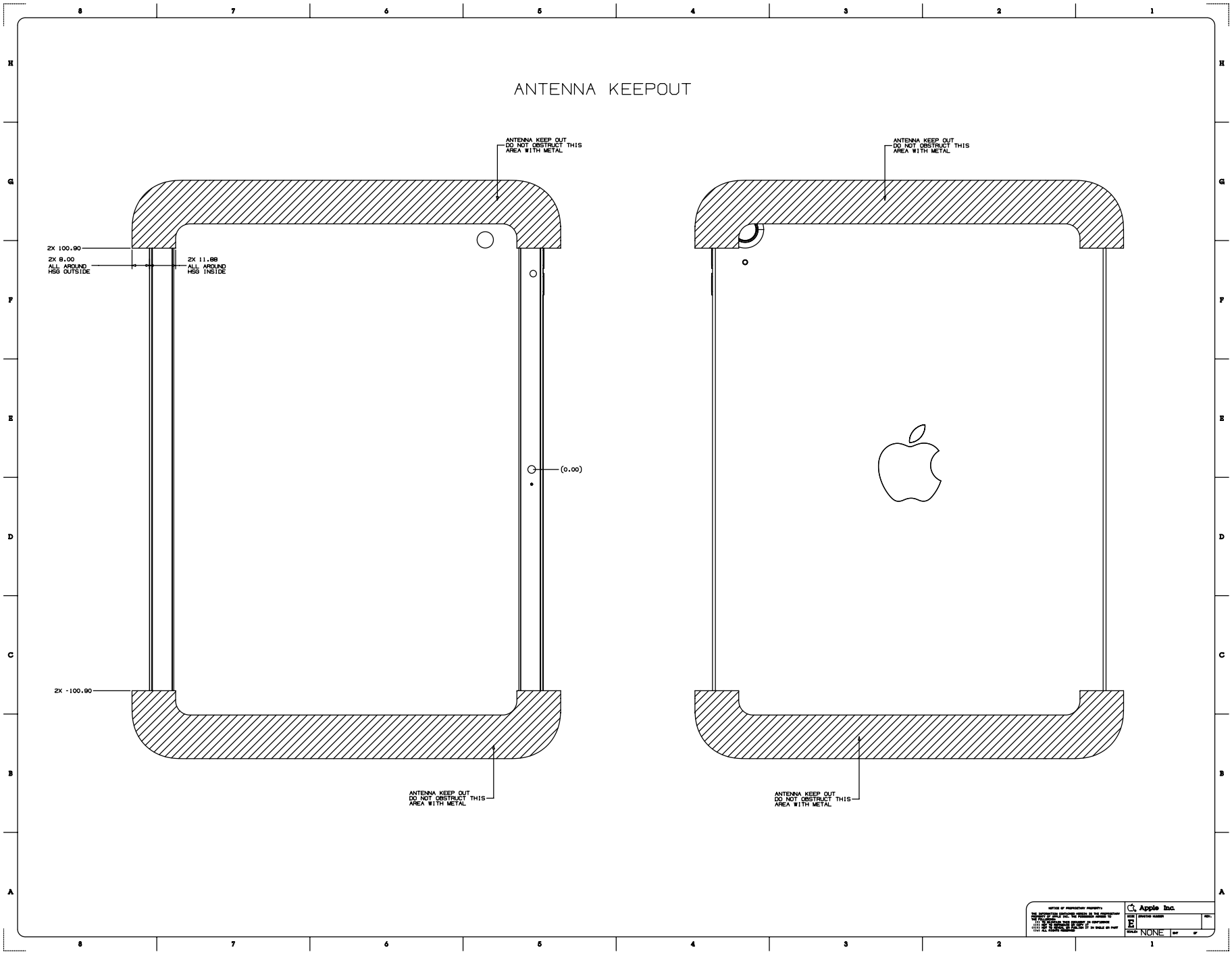

Copyright © 2026 Apple Inc. All Rights Reserved.